REVISIONS					
REV.	ECN NO.	LOCATION	DESCRIPTION	DATE	DESIGN
X1	N/A		INITIAL RELEASE	2017.11.22	梁若彪

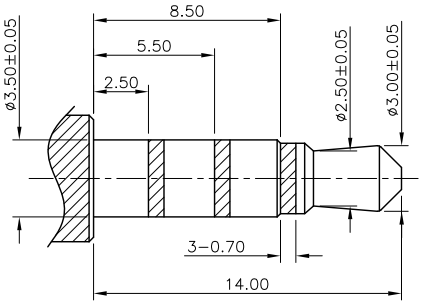

(ø3.50mm 4 POLE PLUG DETAIL DRAWING)

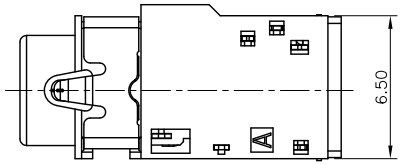

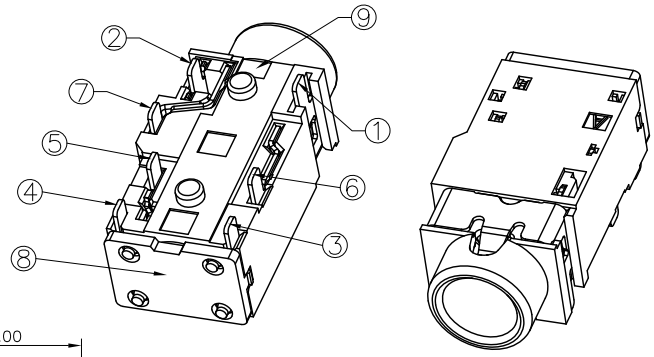

3D VIEW

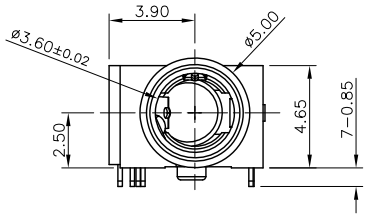

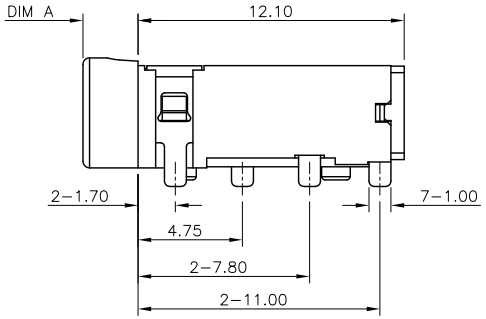

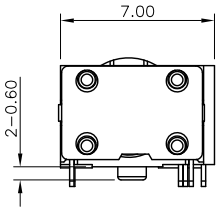

TABLE A:

ITEM	PART NUMBER	DIM A
01	PJ−0322D00−071−182	2.50
02	PJ−0322D0P−071−182	1.50

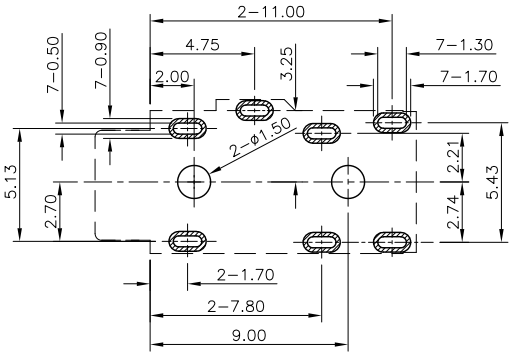

RECOMMENDED PCB LAYOUT
TOP VIEW TOL:±0.05

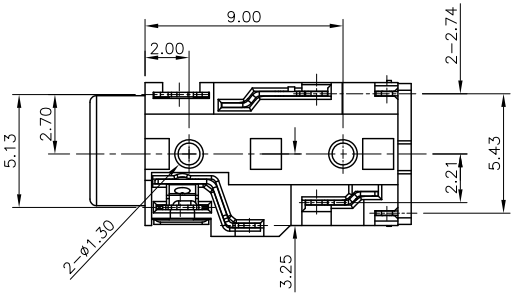

NOTES:
1. CONTACT CURRENT RATING: 1A.
2. CONTACT RESISTANCE: 50mΩ MAX.;
3. INSULATION RESISTANCE: 100MΩ MIN.;
4. DIELECTRIC WITHSTANDING: 500V AC MIN.;
5. DURABILITY: 5,000 CYCLES MIN.;
6. CONNECTOR MATING FORCES: 2.94~29.4N(0.30~3.00Kgf);
7. CONNECTOR UNMATING FORCES: 2.94~29.4N(0.30~3.00Kgf);

ITEM	PART NAME	Q'TY	MATERTAL	DESCRIPTION
09	HOUSING	1 PCS	HIGH TEMPERATURE PLASTIC	BLACK COLOR,UL94 V−0
08	COVER	1 PCS	HIGH TEMPERATURE PLASTIC	BLACK COLOR,UL94 V−0
07	CONTACT G	1 PCS	PHOSPHOR BRONZE T=0.20	Au Plated
06	CONTACT F	1 PCS	PHOSPHOR BRONZE T=0.20	Au Plated
05	CONTACT E	1 PCS	PHOSPHOR BRONZE T=0.20	Au Plated
04	CONTACT D	1 PCS	PHOSPHOR BRONZE T=0.20	Au Plated
03	CONTACT C	1 PCS	STAINLESS STEEL, T=0.20	Au Plated
02	CONTACT B	1 PCS	PHOSPHOR BRONZE T=0.20	Au Plated
01	CONTACT A	1 PCS	PHOSPHOR BRONZE T=0.20	Au Plated

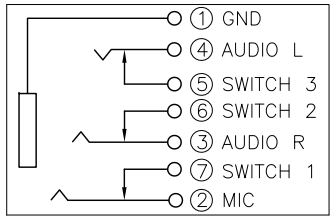

SCHEMATIC

品赞科技 G-Switch

G-Switch Electronic (HongKong) CO.,Ltd.

Unless Otherwise specified, Tolerance:
X. ±0.30
X.x ±0.20
X.xx ±0.15
X.xxx ±0.10
ANGLES ±3°

DESIGN: 梁若彪	DATE: 2017.11.22	TITLE: PHONE JACK CUSTOMER DRAWING	
CHECKED:	DATE:		
APPROVED:	DATE:		
PART NO.: SEE TABLE A		REV.: X1	SCALE: 3:1	UNIT: mm
DRAWING NO.: C−PJ0322D0X−01		SIZE: A4	SHEET: 1/1	