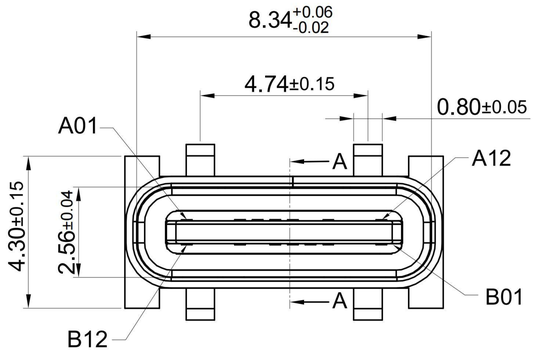

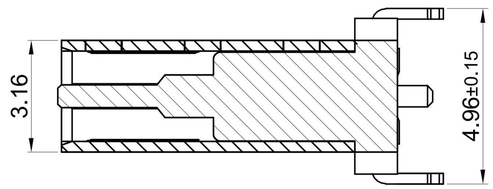

SECTION A-A

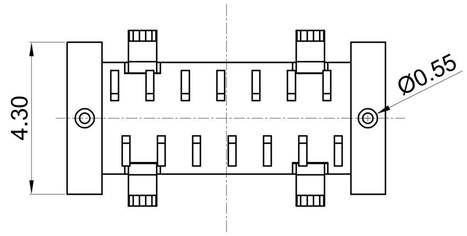

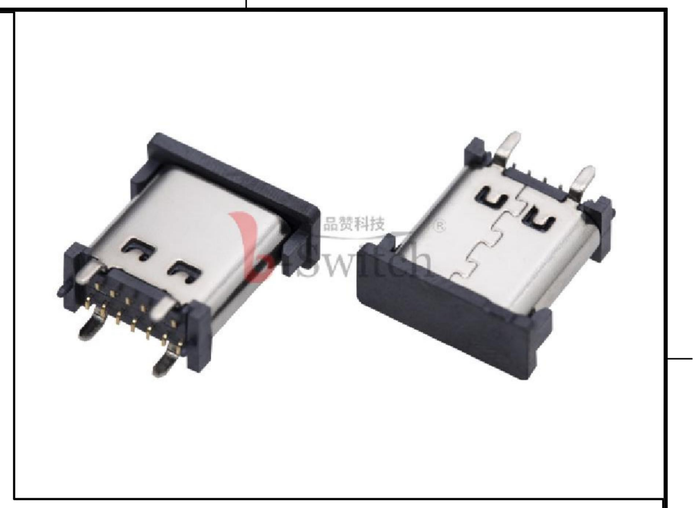

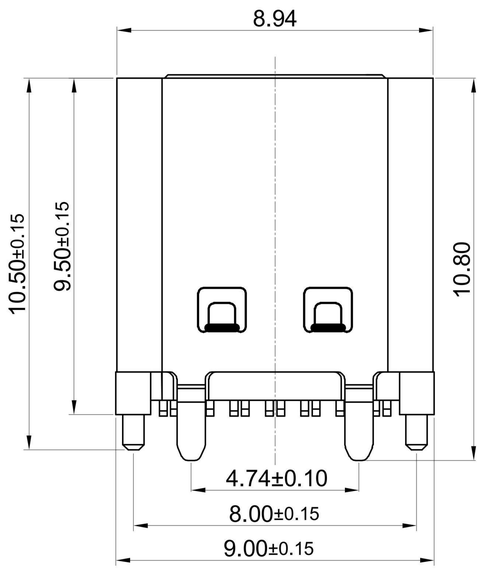

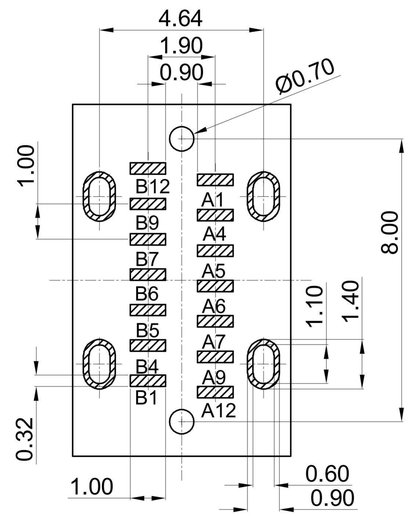

RECOMMENDED P.C.B. LAYOUT (T:1.00mm)
TOLERANCE UNSPECIFIED ±0.05mm

G-Switch USB-C Specification:

1.Current rating: 5A on Vbus/1.25A on Vconn/0.25A on other
2.Dielectric Voltage:100V AC/minute
3. Contact resistance: 40 mΩ Max
4. Insulation resistance: 100 MΩ Min
5. Lnsertion force : 5N~20N
6. Unmating force: 8N~20N
7. Durability:10,000 Cycles
8.Temperature range: -55 °C ~ 85 °C

A1	A2	A3	A4	A5	A6	A7	A8	A9	A10	A11	A12
GND			VBUS	CC1	Dp1	Dn1		VBUS			GND

B12	B11	B10	B9	B8	B7	B6	B5	B4	B3	B2	B1
GND			VBUS		Dn2	Dp2	CC2	VBUS			GND

NO	PARTS	MATERIAL	QTY	REMARKS
1	Shell	SUS	1	Ni Plated
2	Insulator	LCP	1	Black UL 94 V-0
3	Contact	Copper	14	Au3u" Plating On Contact Area G/F On Solder Area
4	Cap	LCP	1	Black UL 94 V-0

Pb Process Capable

RoHS Compliant 2002/95/EC

HALOGEN Compliant Halogen Free

SCALE: 4:1 | UNIT: mm
SIZE: A4

Unless otherwise General Tolerance:

X.	±0.20
X.x	±0.15
X.xx	±0.10
X.xxx	±0.05
Angles	±3°

Title: Vertical Type-c 14P Female L=9.5mm

Molde Code: GT-USB-7090A

DRAWN	CHECKED	APPROVED	DATE
Xia	Chen	Chen	2022.11.21

品赞科技 b-Switch ®

REV: A0 | SHEET: 1/1