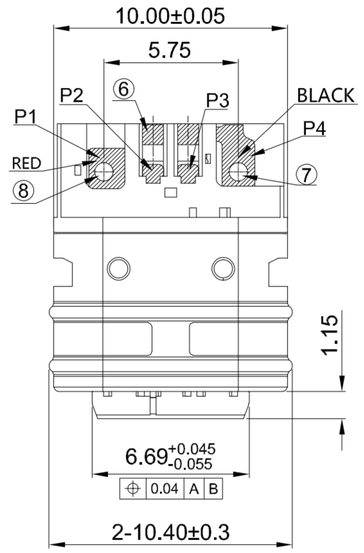

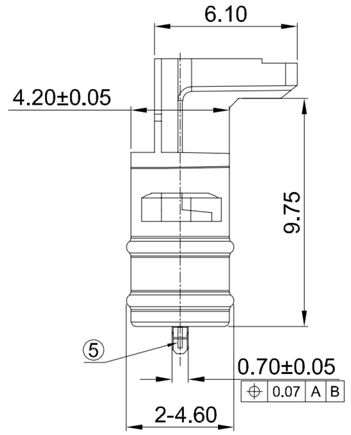

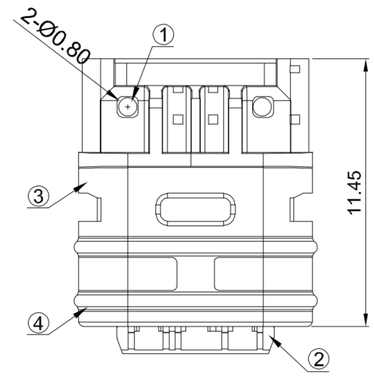

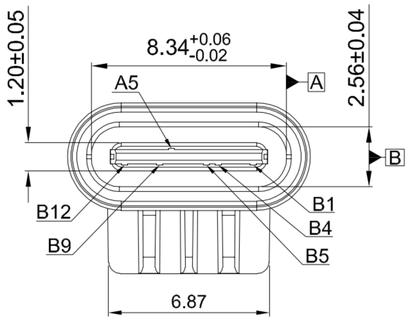

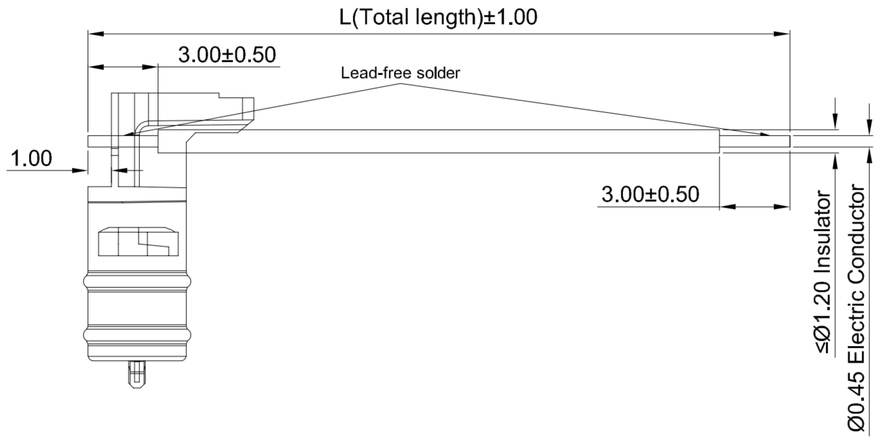

G-Switch USB-C Specification:

1.Current rated: 3A on vbus
2.Withstanding voltage: 100V AC/minute
3.Contact resistance: 40mΩ Max
4.Insulation resistance: 100MΩ Min
5.Operating temperature: -40°C ~ +85°C
6.Mating force: 5N~20N
7.Unmating force: 8N~20N
8.Durability cycle:10,000 cycles
9.Waterproof grade: IP-X7.

CONTACT FIGURE:

CONN PIN	PCB PIN
B4,B9(VBUS)	P1(POSITIVE ELECTRODE)
A5(CC) 5.1kΩ resistance GND	P2
B5(CC) 5.1kΩ resistance GND	P3
B1,B12(GND)	P4(NEGATIVE ELECTRODE)

SEE TABLE

Molde Code	Electroplating specifications	Overall length dimension
GT-USB-7063A01	Nickel plating of 150u "-250u" in the entire area, palladium nickel plating of 5u "min in the contact area,80u "min of fog tin plating on the welding area	Total length 40mm
GT-USB-7063A02	Nickel plating of 150u "-250u" in the entire area, palladium nickel plating of 5u "min in the contact area,80u "min of fog tin plating on the welding area	Total length 30mm
GT-USB-7063A03	Nickel plating of 150u "-250u" in the entire area, gold plating of 1u "min in the contact area,80u "min of fog tin plating on the welding area	Total length 40mm
GT-USB-7063A04	Nickel plating of 150u "-250u" in the entire area, gold plating of 1u "min in the contact area,80u "min of fog tin plating on the welding area	Total length 30mm

A1	A2	A3	A4	A5	A6	A7	A8	A9	A10	A11	A12
				CC1							
				Second							

B12	B11	B10	B9	B8	B7	B6	B5	B4	B3	B2	B1
GND			VBUS				CC2	VBUS			GND
First			First				Second	First			First

NO.	PARTS	MATERIAL	REMARKS
1	MOLDING SEALING RING	HIGH TEMPERATURE PLASTIC	TPE BLACK
2	MID PLATE	STAINLESS STEEL	SUS301 CLEAN
3	FIRST MOLDING	HIGH TEMPERATURE PLASTIC	PC BLACK
4	SECOND MOLDING	HIGH TEMPERATURE PLASTIC	PA9T BLACK
5	TERMINALS	COPPER ALLOY(C7025)	Au PLATING ON CONTACT AREA
6	RESISTANCE		5.1±5%kΩ（0603）
7	WIRE ROD		BLACK UL10368 AWG28
8	WIRE ROD		RED UL10368 AWG28

IPX7
1m/30min

Pb Process Capable

RoHS Compliant EU RoHS Standards

HALOGEN Compliant Halogen Free

SCALE: 1:1	UNIT: mm	Title:	Soldered Type-c 6P Female PD Fast Charging With Resistance L=11.45mm
SIZE: A4		Molde Code:	GT-USB-7063B

Unless otherwise General Tolerance:

X.	±0.25
X.x	±0.20
X.xx	±0.15
X.xxx	±0.10
X°	±5°

DRAWN	CHECKED	APPROVED	DATE
Xia	Chen	Chen	2023.02.31

品赞科技 b-Switch ®
www.dg-switch.com

REV: A0 SHEET: 1/1