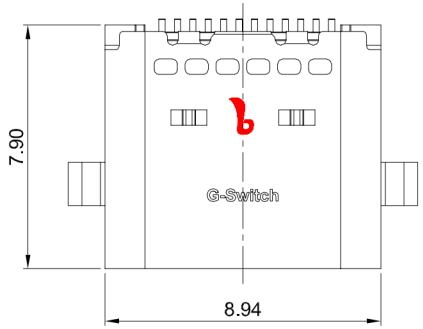

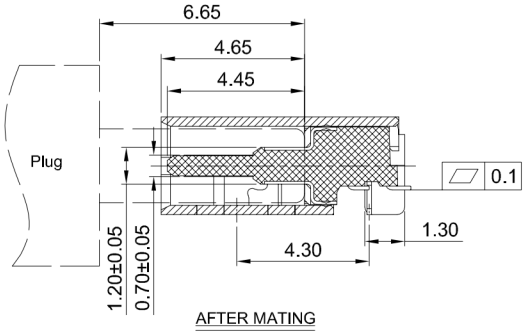

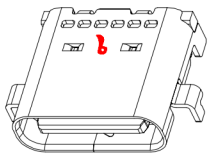

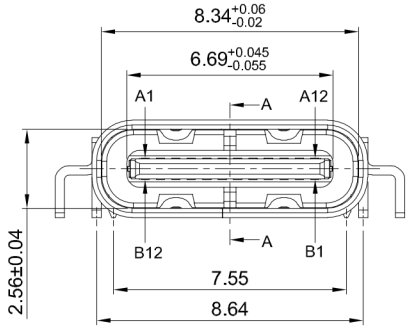

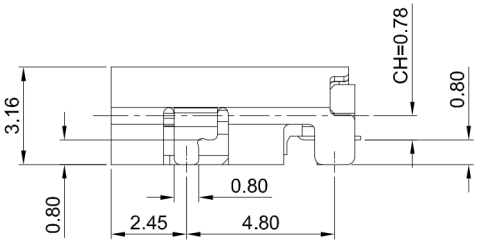

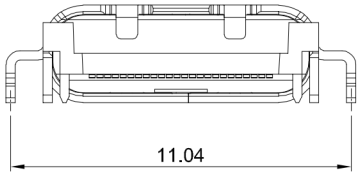

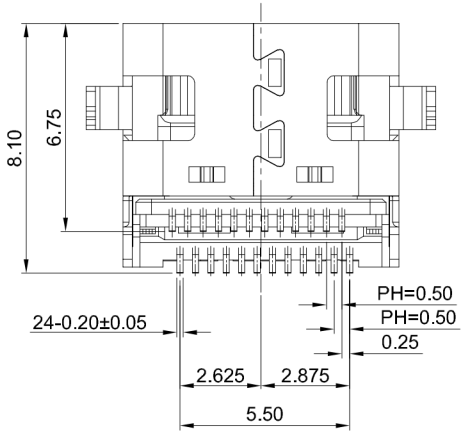

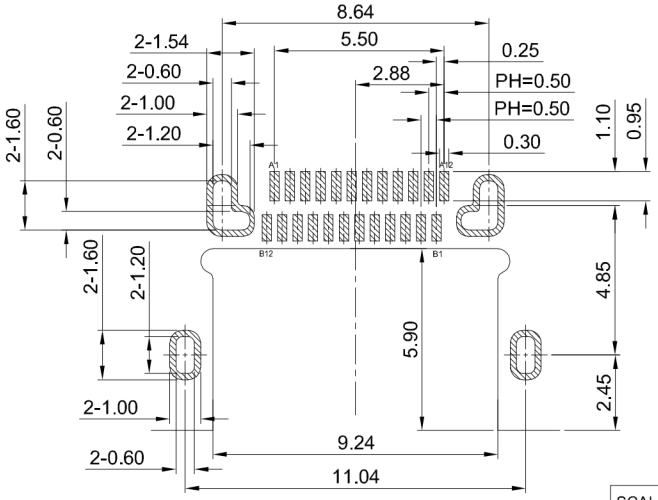

RECOMMENDED PCB LAYOUT
TOLERANCE:±0.05

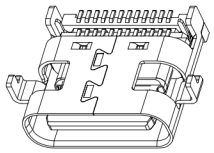

G-Switch USB-C Specification:

1.Current rated: 5A on vbus/1.25A
on vconn/0.25A on other
Voltage rating: 24V AC
2.Withstanding voltage: 100V AC/minute
3.Contact resistance: 40mΩ Max
4.Insulation resistance: 100MΩ Min
5.Operating temperature: -40°C ~ +85°C
6.Mating force: 5N~20N
7.Unmating force: 8N~20N
8.Durability cycle:10,000 cycles
9.Data transmission rate up to 10Gbp/s min
10.Compliant with: IEC62680-1-3

USB IF TID:13209

A1	A2	A3	A4	A5	A6	A7	A8	A9	A10	A11	A12
GND	TX1+	TX1-	VBUS	CC1	D+	D-	SBU1	VBUS	RX2-	RX2+	GND
First	Second	Second	First	Second	Second	Second	Second	First	Second	Second	First

B12	B11	B10	B9	B8	B7	B6	B5	B4	B3	B2	B1
GND	RX1+	RX1-	VBUS	SBU2	D-	D+	CC2	VBUS	TX2-	TX2+	GND
First	Second	Second	First	Second	Second	Second	Second	First	Second	Second	First

NO.	PARTS	MATERIAL	REMARKS
1	SHELL	STAINLESS STEEL304	Ni30u"MIN PLATED
2	GND PLATE	STAINLESS STEEL301	Ni30u"MIN PLATED
3	MID PLATE	STAINLESS STEEL301	--
4	HOUSING	HIGH TEMPERATURE PLASTIC	LCP BLACK UL 94V-0
5	TERMINALS	COPPER ALLOY C7025	Au1u"MIN PLATING ON CONTACT AREA G/F MIN PLATING ON CONTACT AREA

Pb Process Capable

RoHS Compliant EU RoHS Standards

HALOGEN Compliant Halogen Free

SCALE: 1:1	UNIT: mm	Title:	Horizontal Type-c 24P Female SMT Mid-Mount0.8 CH=0.78 L=7.9mm
SIZE: A4		Molde Code:	GT-USB-9007A

Unless otherwise General Tolerance:

X.x	±0.30
X.xx	±0.20
X.xxx	±0.10
X.x°	±3°
X.xx°	±2°

DRAWN	CHECKED	APPROVED	DATE
Xia	Chen	Chen	2023.02.01

品赞科技 G-Switch ®
www.dg-switch.com

REV: A0 SHEET: 1/1

品赞电子（东莞）有限公司