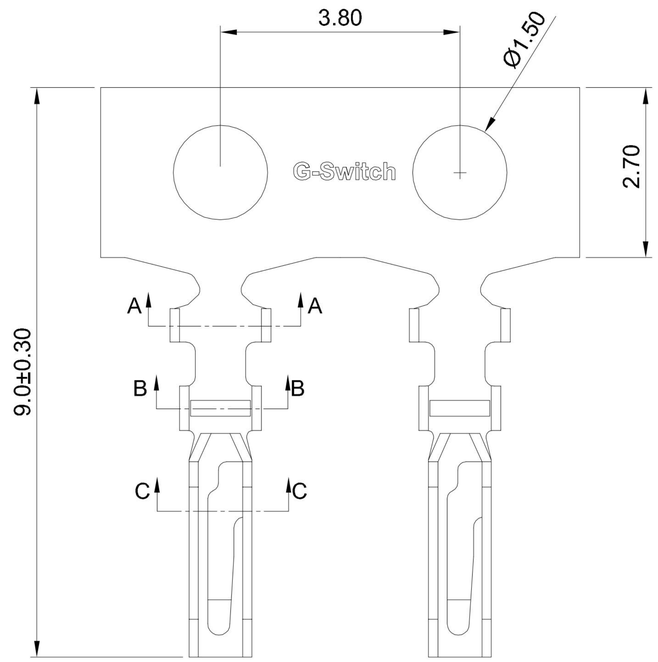

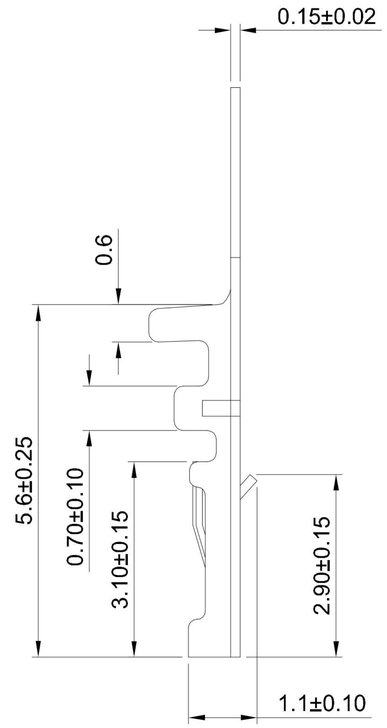

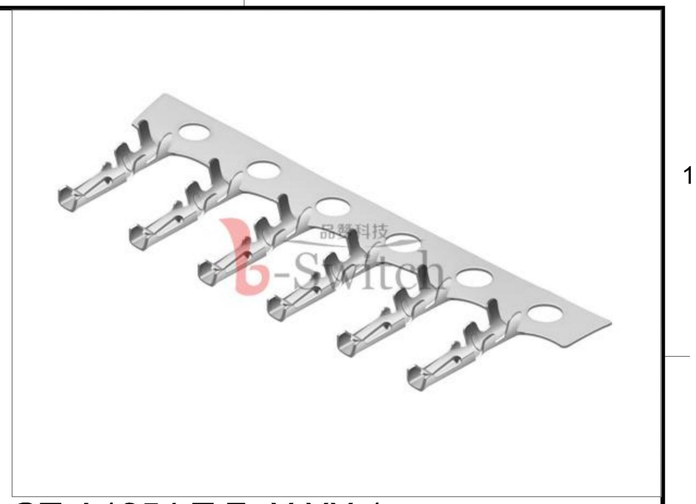

GT-A1254 T F -X XX 1

- **G-Switch**
- **Series No**
- **Connector** T-Terminal
- **F-Female**
- **Metal** P-Phosphor Bronze
- **Terminal Plating** BT-Bright Tin; 11-All G/F

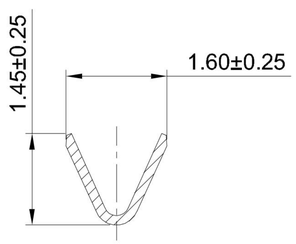

SECTION:A-A

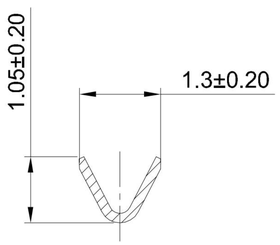

SECTION:B-B

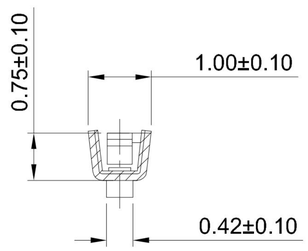

SECTION:C-C

G-Switch Specification:

1.Current rated: 1.0A AC/DC
2.Voltage rating: 125V AC/DC
3.Withstanding voltage: 500V AC
4.Contact resistance: 20mΩ max.
5.Insulation resistance: 100MΩ min
6.Durability cycle: 25Cycles
7.Removal force: 0.80kgf/Pin min
8.Operating temperature range: -25°C ~ +85°C

Part NO	Material	Plating	Wire Size	Insulation O.D	Reel/PCS
GT-A1254TF-PBT1	Phosphor Bronze	Bright Tin	AWG#28~32	1.00mm(Max)	25000
GT-A1254TF-P111	Phosphor Bronze	All G/F	AWG#28~32	1.00mm(Max)	25000

Pb Process Capable — RoHS Compliant EU RoHS Standards

SCALE: 1:1	UNIT: mm	Title: Terminal 1.25mm Pitch Crimp Style	
SIZE: A4		Molde Code: GT-A1254TF-XXX1	
Unless otherwise General Tolerance: X ±0.40; X.x ±0.30; X.xx ±0.20; X° ±5°; X.x° ±3°		DRAWN: Hu	CHECKED: Chen
		APPROVED: Chen	DATE: 2022.12.28
REV: A0	SHEET: 1/1		

品赞科技 G-Switch ® www.dg-switch.com