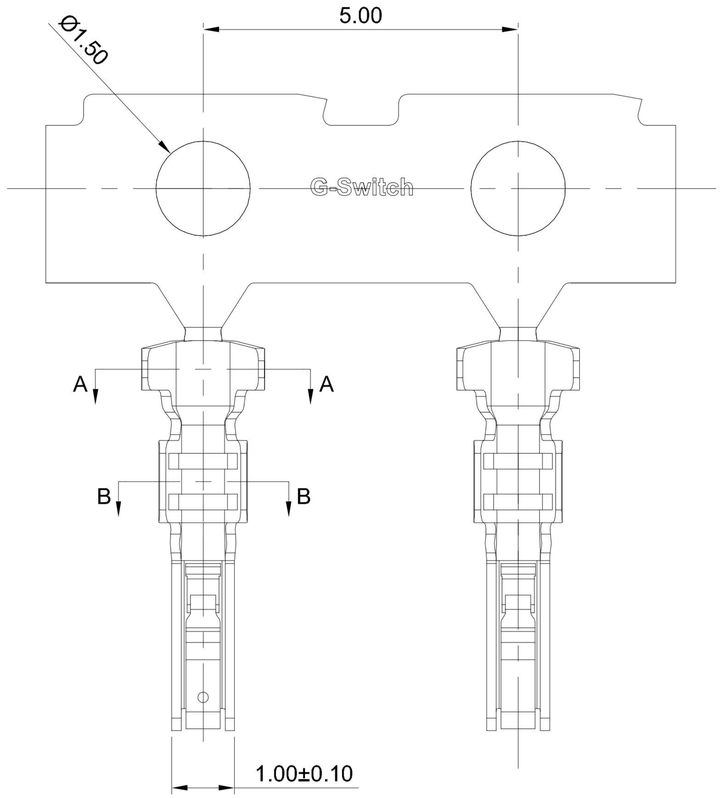

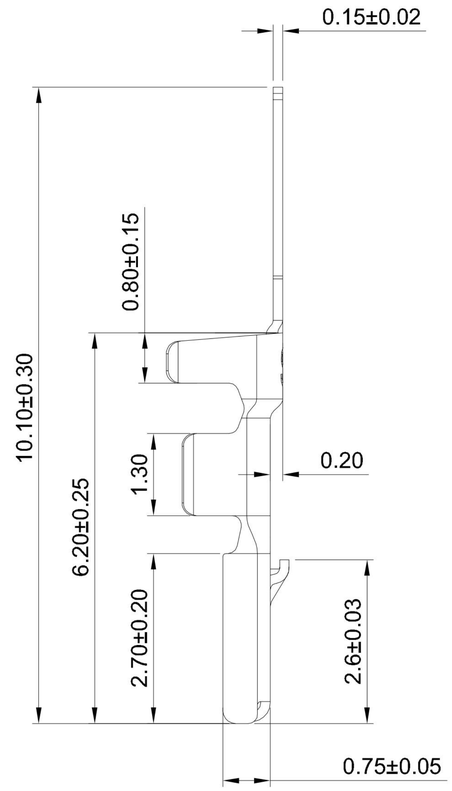

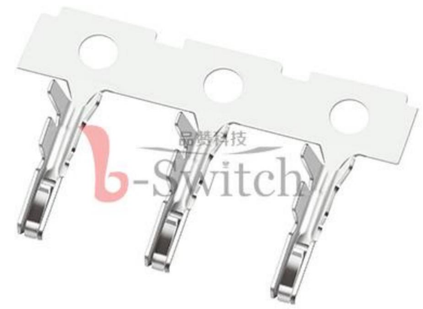

GT-A1504 T F -X XX 1

- **G-Switch**
- **Series No**
- **Connector** T-Terminal
- **F-Female**
- **Metal** P-Phosphor bronze
- **Terminal Plating** BT-Bright Tin, 11-All G/F

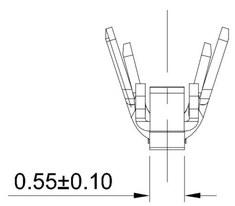

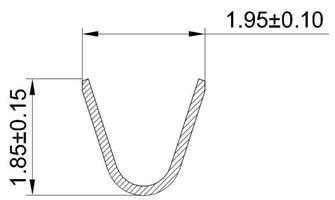

SECTION:A-A

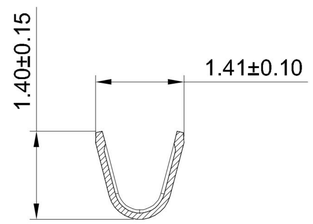

SECTION:B-B

G-Switch Specification:

1.Current rated: 2A AC/DC
2.Voltage rating: 100V AC/DC
3.Withstanding voltage:500V AC
4.Contact resistance: 20mΩ max.
5.Insulation resistance: 500MΩ min
6.Durability cycle: 30Cycles
7.Removal force: 1.0kgf/Pin min
8.Operating temperature range: -25°C ~ +85°C

Part NO	Material	Plating	Wire Size	Insulation O.D	Reel/PCS
GT-A1504TF-P111	Phosphor bronze	All G/F	AWG#24~28	1.20mm(Max)	10000
GT-A1504TF-PBT1	Phosphor bronze	Bright Tin	AWG#24~28	1.20mm(Max)	10000

Pb Process Capable — RoHS Compliant EU RoHS Standards

SCALE: 1:1	UNIT: mm	Title: Terminal 1.50mm Pitch ZE Crimp Style					
SIZE: A4		Molde Code: GT-A1504TF-XXX1					
Unless otherwise General Tolerance: X ±0.40, X.x ±0.30, X.xx ±0.20, X° ±5°, X.x° ±3°		DRAWN	CHECKED	APPROVED	DATE		
		Hu	Chen	Chen	2022.12.28	REV: A0	SHEET: 1/1

品赞科技 b-Switch ® www.dg-switch.com