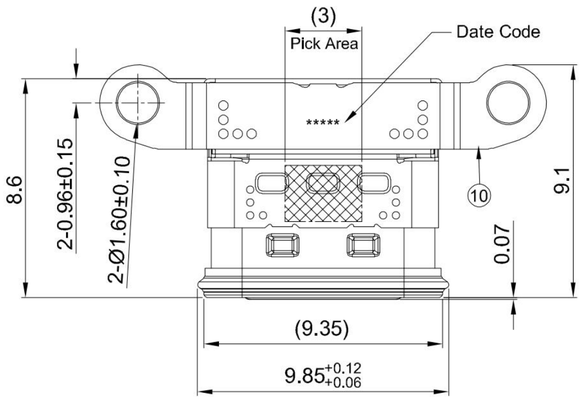

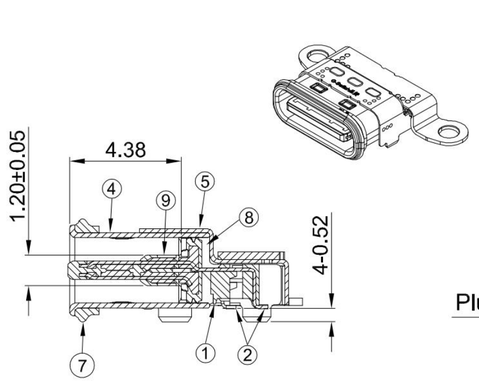

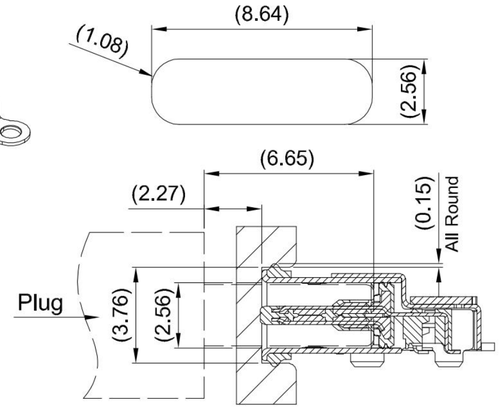

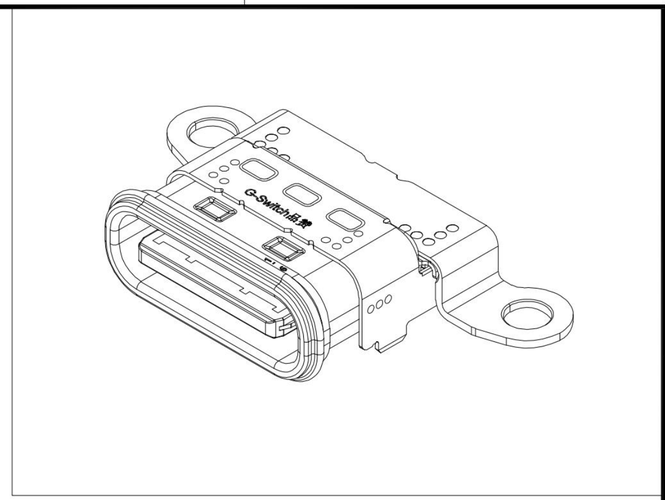

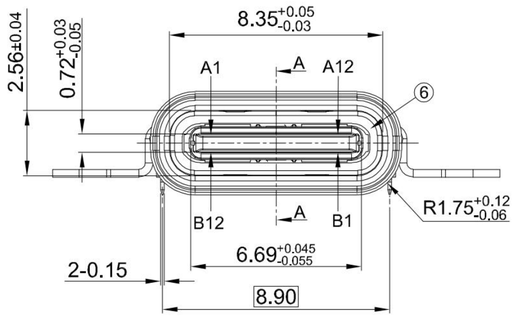

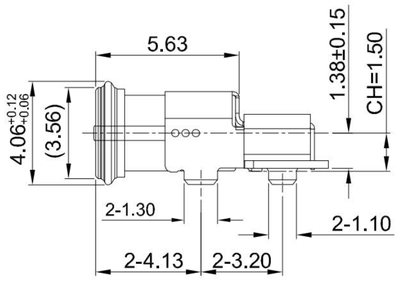

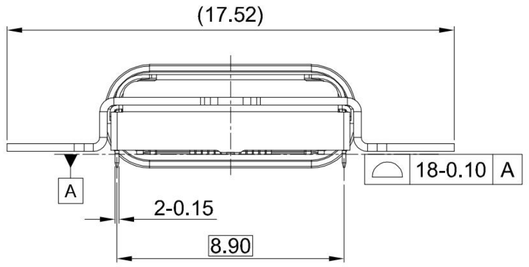

G-Switch USB-C Specification:

1. Current rated: 5A on vbus/1.25A on vconn/0.25A on other
   Voltage rating: 24V AC
2. Withstanding voltage: 100V AC/minute
3. Contact resistance: 40mΩ Max
4. Insulation resistance: 100MΩ Min
5. Operating temperature: -40°C ~ +85°C
6. Mating force: 5N~20N
7. Unmating force: 8N~20N
8. Durability cycle:10,000 cycles
9. Waterproof grade: IP-X8.
10. Compliant with: IEC62680-1-3

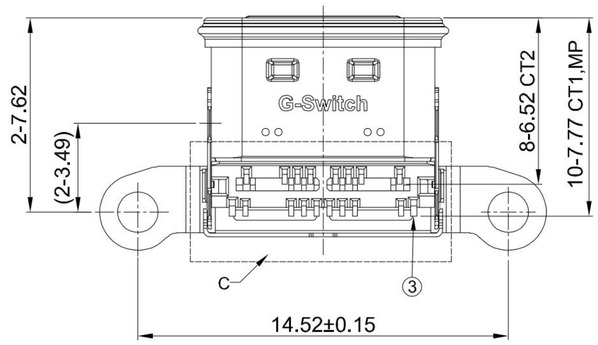

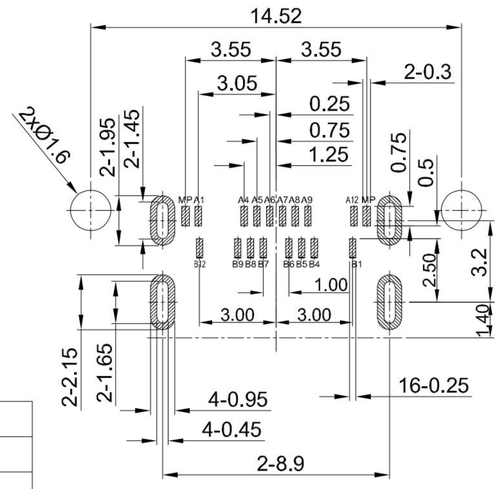

RECOMMENDED PCB LAYOUT
TOLERANCE:±0.05

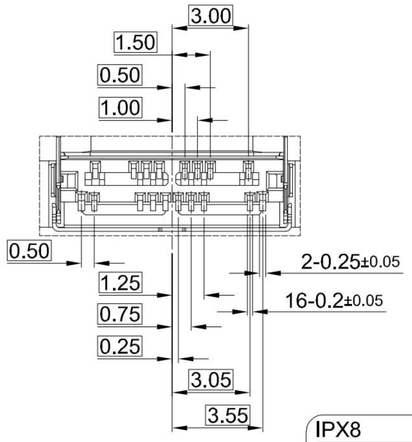

DETAIL OF C

A1	A2	A3	A4	A5	A6	A7	A8	A9	A10	A11	A12
GND			VBUS	CC1	D+	D-	SBU1	VBUS			GND
First			First	Second	Second	Second	Second	First			First

B12	B11	B10	B9	B8	B7	B6	B5	B4	B3	B2	B1
GND			VBUS	SBU2	D-	D+	CC2	VBUS			GND
First			First	Second	Second	Second	Second	First			First

NO.	PARTS	MATERIAL	REMARKS
10	BRACKET	SUS301	Ni30u"MIN PLATED
9	EMI	SUS301	Ni30u"MIN PLATED
8	ADHESIVE	EPOXY RESIN	BLACK
7	WATERPROOF RING	SILIGA GEL	A:60 BLACK
6	INSIDE PLATE	SUS304	——
5	OUT SHELL	SUS304	Ni30u"MIN PLATED
4	INNER SHELL	SUS316	——
3	MID PLATE	SUS301	——
2	TERMINALS	COPPER ALLOY C7025	Au3u"MIN PLATING ON CONTACT AREA Au1u"MIN PLATING ON SOLDER AREA
1	HOUSING	PA9T	BLACK UL 94 V-0

Pb Process Capable

RoHS Compliant EU RoHS Standards

HALOGEN Compliant Halogen Free

SCALE: 1:1	UNIT: mm	Title:	IPX8 Horizontal Type-c 16P Female SMT CH=1.5 L=9.1mm
SIZE: A4			
Unless otherwise General Tolerance: X.x ±0.30, X.xx ±0.20, X.xxx ±0.10, X.x° ±3°, X.xx° ±2°		Molde Code:	GT-USB-9045F

DRAWN	CHECKED	APPROVED	DATE
Xia	Chen	Chen	2024.03.10

品赞科技 G-Switch ® www.dg-switch.com

REV: A0 SHEET: 1/1

品赞电子（东莞）有限公司