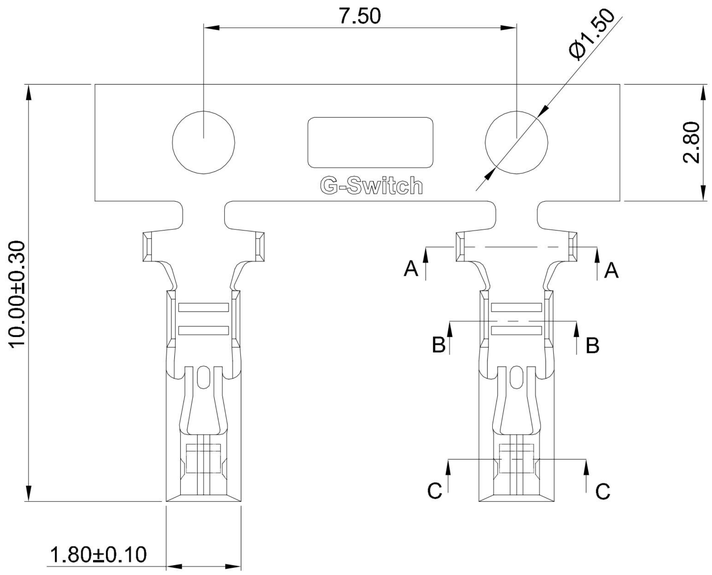

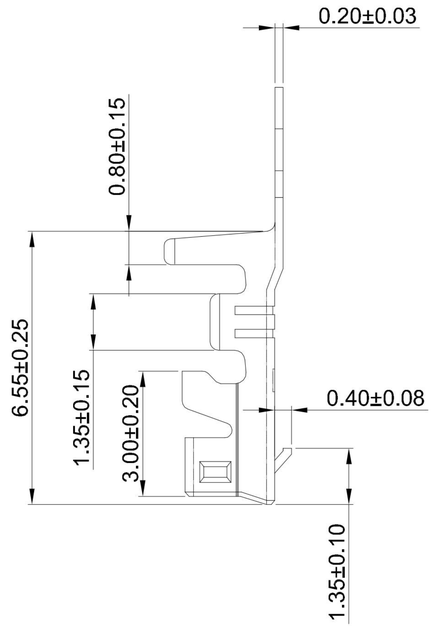

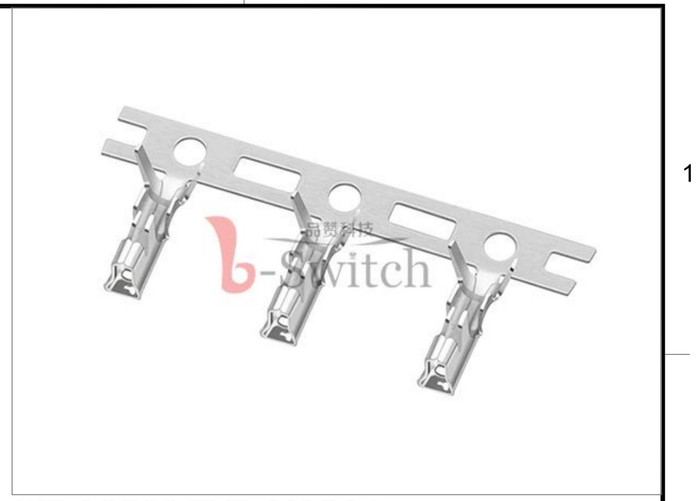

GT-A2508 T F -X XX 1

- **G-Switch**
- **Series No**
- **Connector** T-Terminal
- **F-Female**
- **Metal** P-Phosphor Bronze
- **Terminal Plating** BT-Bright Tin

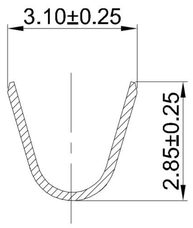

SECTION:A-A

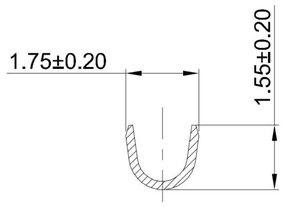

SECTION:B-B

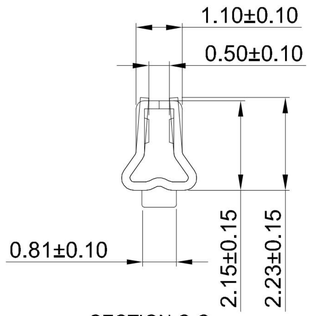

SECTION:C-C

G-Switch Specification:

1.Current rated: 3.0A AC/DC
2.Voltage rating: 250V AC/DC
3.Withstanding voltage: 1000V AC
4.Contact resistance: 10mΩ max.
5.Insulation resistance: 1000MΩ min
6.Durability cycle: 50Cycles
7.Removal force: 2.0kgf/Pin min
8.Operating temperature range: -25°C ~ +85°C

Part NO	Material	Plating	Wire Size	Insulation O.D	Reel/PCS
GT-A2508TF-PBT1	Phosphor bronze	Bright Tin	AWG#22~#26	1.60mm(Max)	8000

Pb Process Capable — RoHS Compliant EU RoHS Standards

SCALE: 1:1	UNIT: mm	Title: Terminal 2.50mm Pitch Crimp Style Female				
SIZE: A4		Molde Code: GT-A2508TF-XXX1				
Unless otherwise General Tolerance: X ±0.40, X.x ±0.30, X.xx ±0.20, X° ±5°, X.x° ±3°		DRAWN	CHECKED	APPROVED	DATE	
		Hu	Chen	Chen	2021.10.20	REV: A0 / SHEET: 1/1

品赞科技 b-Switch ® www.dg-switch.com