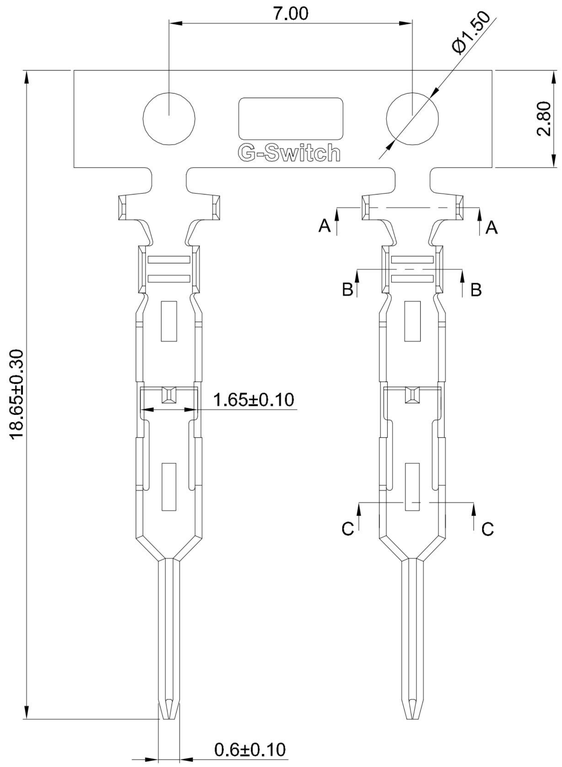

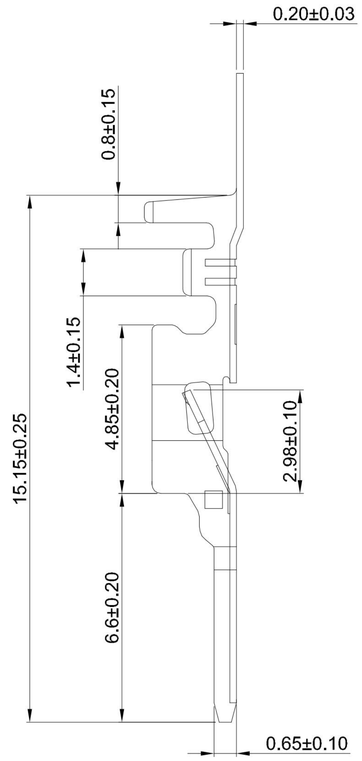

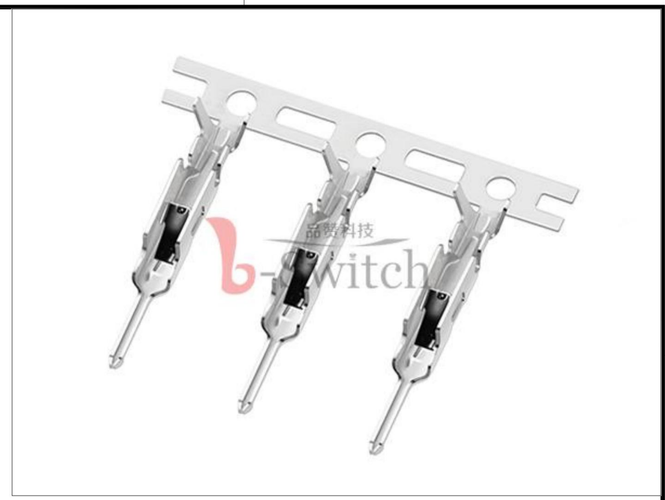

GT-A2508 T M -X XX 1

- **G-Switch**
- **Series No**
- **Connector** T-Terminal
- **M-Male**
- **Metal** P-Phosphor Bronze
- **Terminal Plating** BT-Bright Tin

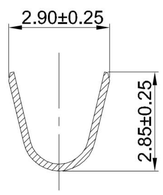

SECTION:A-A

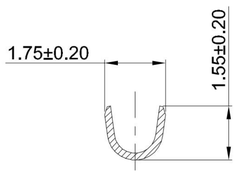

SECTION:B-B

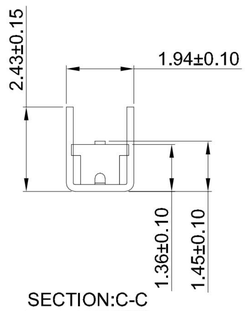

SECTION:C-C

G-Switch Specification:

1.Current rated: 3.0A AC/DC
2.Voltage rating: 250V AC/DC
3.Withstanding voltage: 1000V AC
4.Contact resistance: 10mΩ max.
5.Insulation resistance: 1000MΩ min
6.Durability cycle: 50Cycles
7.Removal force: 2.0kgf/Pin min
8.Operating temperature range: -25°C ~ +85°C

Part NO	Material	Plating	Wire Size	Insulation O.D	Reel/PCS
GT-A2508TM-PBT1	Phosphor bronze	Bright Tin	AWG#22~#26	1.60mm(Max)	7000

Pb Process Capable — RoHS Compliant EU RoHS Standards

SCALE: 1:1	UNIT: mm	Title: Terminal 2.50mm Pitch Crimp Style Male	品赞科技 b-Switch www.dg-switch.com
SIZE: A4		Molde Code: GT-A2508TM-XXX1	

Unless otherwise General Tolerance:

X	±0.40
X.x	±0.30
X.xx	±0.20
X°	±5°
X.x°	±3°

DRAWN	CHECKED	APPROVED	DATE	REV:	SHEET:
Hu	Chen	Chen	2021.10.20	A0	1/1