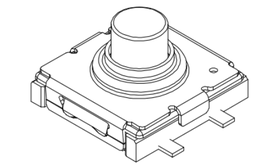

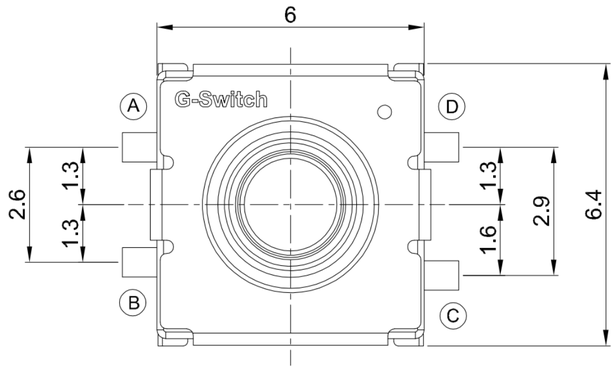

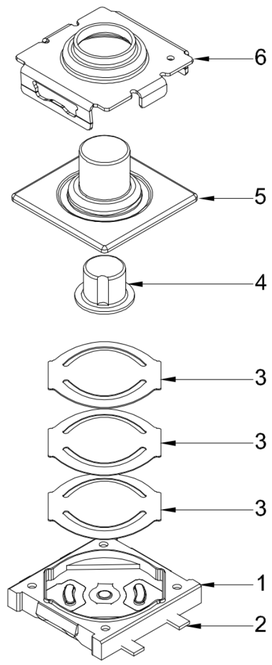

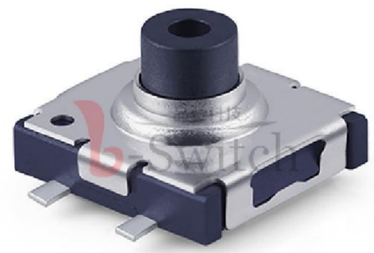

GT-TC055X-H038 - L2

G-Switch

Operating Force
A=1st 100gf,2nd 250gf
B=1st 200gf,2nd 500gf

Switch Height
H038=3.8mm

Switch Lifetime
L2=200,000 Cycles

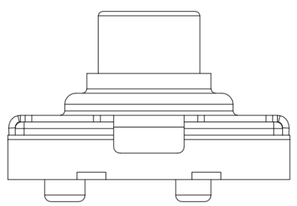

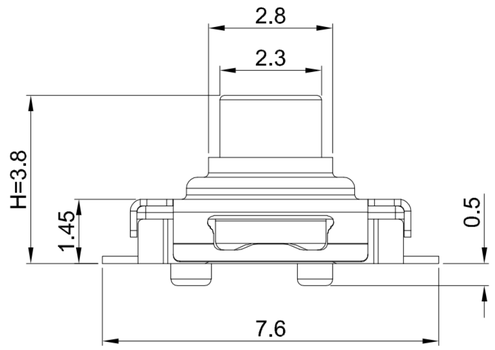

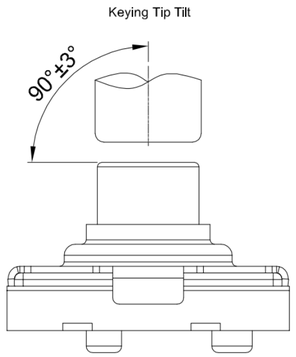

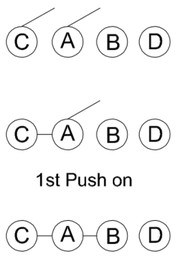

CIRCUIT DIAGRAM

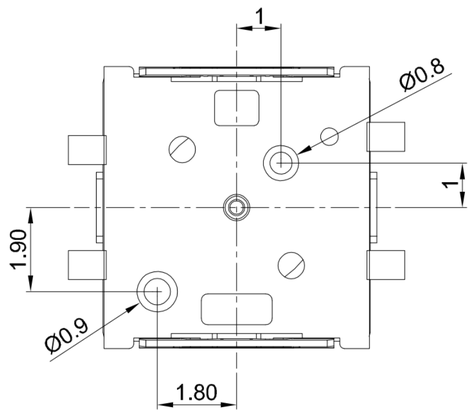

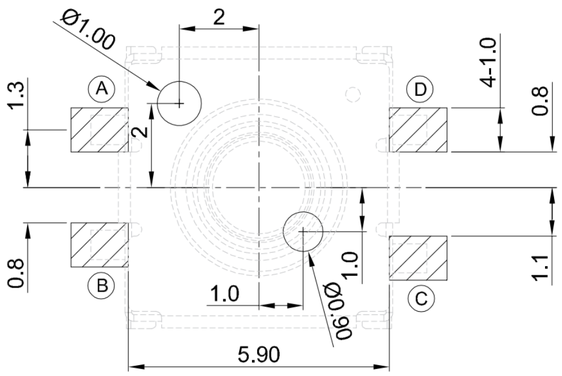

RECOMMENDED PCB LAYOUT
TOLERANCE:±0.05

G-Switch Specification:

1.Operating temperature range: -40°C ~ +85°C
2.Rating: 50mA.12V DC
3.Insulation resistance: 100MΩ min.100V DC
4.Dielectric strength: 250V AC for 1 min
5.Contact resistance:100mΩ max.
6.Travel A:1st 0.35±0.2mm;2nd 0.65±0.2mm
Travel B:1st 1±0.15mm;2nd 0.8±0.15mm

NO.	PART NAME	MATERIAL	REMARK
6	COVER	STAINLESS STEEL	
5	STEM	SILICA GEL	BLACK
4	STEM	HIGH TEMPERATURE PLASTIC	LCP BLACK
3	CONTACT	STAINLESS STEEL	Ag PLATING
2	TERMINAL	BRASS	Ag PLATING
1	BASE	HIGH TEMPERATURE PLASTIC	PA6T BLACK

Pb Process Capable

RoHS Compliant EU RoHS Standards

HALOGEN Compliant Halogen Free

SCALE: 1:1	UNIT: mm	Title:	Vertical Tact Switch SMT 6.4×6.0×H3.8mm
SIZE: A4		Molde Code:	GT-TC055X-H038-L2

Unless otherwise General Tolerance:

X.	±0.25
X.x	±0.20
X.xx	±0.15
X°	±5°
X.x°	±3°

DRAWN	CHECKED	APPROVED	DATE
Xia	Chen	Chen	2023.02.01

品赞科技 b-Switch ®
www.dg-switch.com

REV: A0 SHEET: 1/1