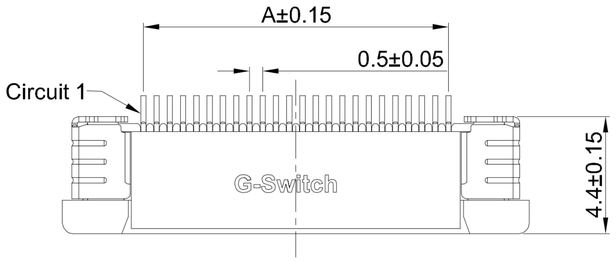

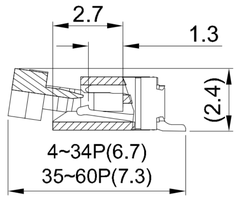

SECTION A-A

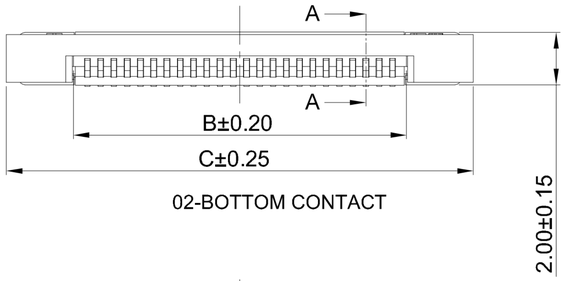

02-BOTTOM CONTACT

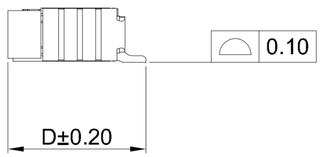

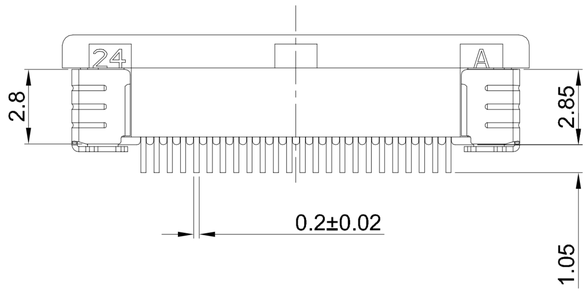

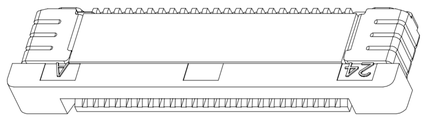

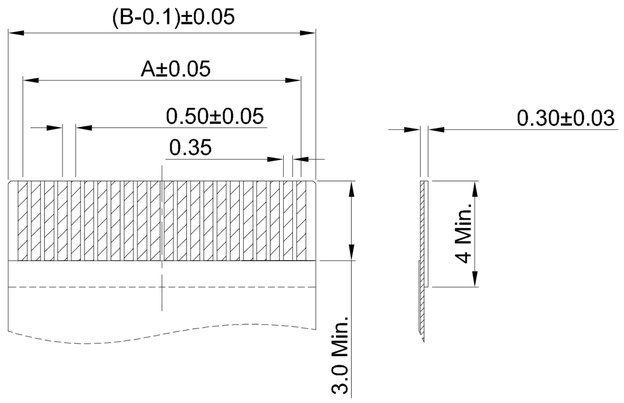

APPLICABLE FPC

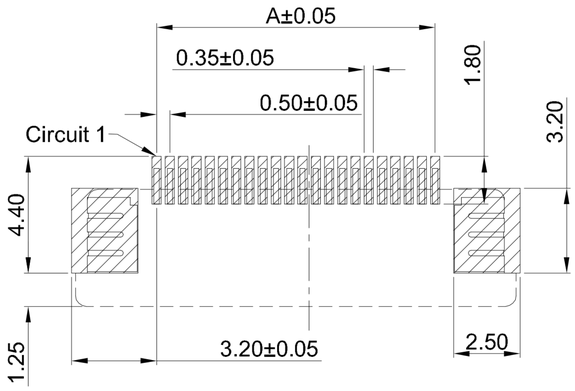

RECOMMENDED PCB LAYOUT
TOLERANCE:±0.05

G-Switch Specification:

1.Current rated: 0.5A AC/DC
2.Voltage rating: 50V AC/DC
3.Withstanding voltage: 250V AC for 1 min
4.Contact resistance: 30mΩ max.
5.Insulation resistance: 100MΩ min
6.Durability cycle: 30Cycles
7.Removal force: 0.04kgf/Pin min
8.Operating temperature range: -55°C ~ +85°C

GT-F0504 S R 20 -XX X XX 02

G-Switch

Series No

Termipoint
S-SMT

Angle
R-90°

Height
20-2.0mm

Pin Q' PY
04~60

Housing Colour
S-Nature

Terminal Plating
11-All G/F
MT-Matte Tin

Contact
01-Upper Contact
02-Bottom Contact

Ordering Information:

Circuit	Dimensions(mm) A	B	C	D	Circuit	Dimensions(mm) A	B	C	D	Circuit	Dimensions(mm) A	B	C	D
04	1.50	2.56	7.60	5.20	23	11.00	12.06	17.10	5.20	42	20.50	21.56	26.60	5.75
05	2.00	3.06	8.10		24	11.50	12.56	17.60		43	21.00	22.06	27.10	
06	2.50	3.56	8.60		25	12.00	13.06	18.10		44	21.50	22.56	27.60	
07	3.00	4.06	9.10		26	12.50	13.56	18.60		45	22.00	23.06	28.10	
08	3.50	4.56	9.60		27	13.00	14.06	19.10		46	22.50	23.56	28.60	
09	4.00	5.06	10.10		28	13.50	14.56	19.60		47	23.00	24.06	29.10	
10	4.50	5.56	10.60		29	14.00	15.06	20.10		48	23.50	24.56	29.60	
11	5.00	6.06	11.10		30	14.50	15.56	20.60		49	24.00	25.06	30.10	
12	5.50	6.56	11.60		31	15.00	16.06	21.10		50	24.50	25.56	30.60	
13	6.00	7.06	12.10		32	15.50	16.56	21.60		51	25.00	26.06	31.10	
14	6.50	7.56	12.60		33	16.00	17.06	22.10		52	25.50	26.56	31.60	
15	7.00	8.06	13.10		34	16.50	17.56	22.60		53	26.00	27.06	32.10	
16	7.50	8.56	13.60		35	17.00	18.06	23.10	5.75	54	26.50	27.56	32.60	
17	8.00	9.06	14.10		36	17.50	18.56	23.60		55	27.00	28.06	33.10	
18	8.50	9.56	14.60		37	18.00	19.06	24.10		56	27.50	28.56	33.60	
19	9.00	10.06	15.10		38	18.50	19.56	24.60		57	28.00	29.06	34.10	
20	9.50	10.56	15.60		39	19.00	20.06	25.10		58	28.50	29.56	34.60	
21	10.00	11.06	16.10		40	19.50	20.56	25.60		59	29.00	30.06	35.10	
22	10.50	11.56	16.60		41	20.00	21.06	26.10		60	29.50	30.56	35.60	

NO.	PART NAME	MATERIAL	REMARK
4	SOLDER TABS	BRASS	MATTE Tin
3	CONTACT	PHOSPHOR BRONZE	ALL Au G/F OR MATTE Tin
2	COVER	LCP,94V-0	BLACK
1	HOUSING	LCP,94V-0	NATURE

Pb Process Capable | RoHS Compliant EU RoHS Standards | Halogen Free Compliant

SCALE: 1:1 | UNIT: mm | SIZE: A4

Unless otherwise General Tolerance:

X	±0.40
X.x	±0.30
X.xx	±0.20
X°	±5°
X.x°	±3°

Title: FPC 0.50mm Pitch 90° SMT Bottom Contact Type H2.0mm Connector

Molde Code: GT-F0504SR20-XXXXX02

DRAWN	CHECKED	APPROVED	DATE
Jiang	Hu	Chen	2021.06.28

品赞科技 G-Switch www.dg-switch.com

REV: A0 | SHEET: 1/1